ECO NO.	DATE	REV.	REVISION RECORD	AUTH.	DR.BY
2993	7/5 96	A	ADDED K1 BLOCK		HFV
4664	8/1 00	B	ADDED TRANSIENT VOLTAGE SUPPRESSOR		TSM

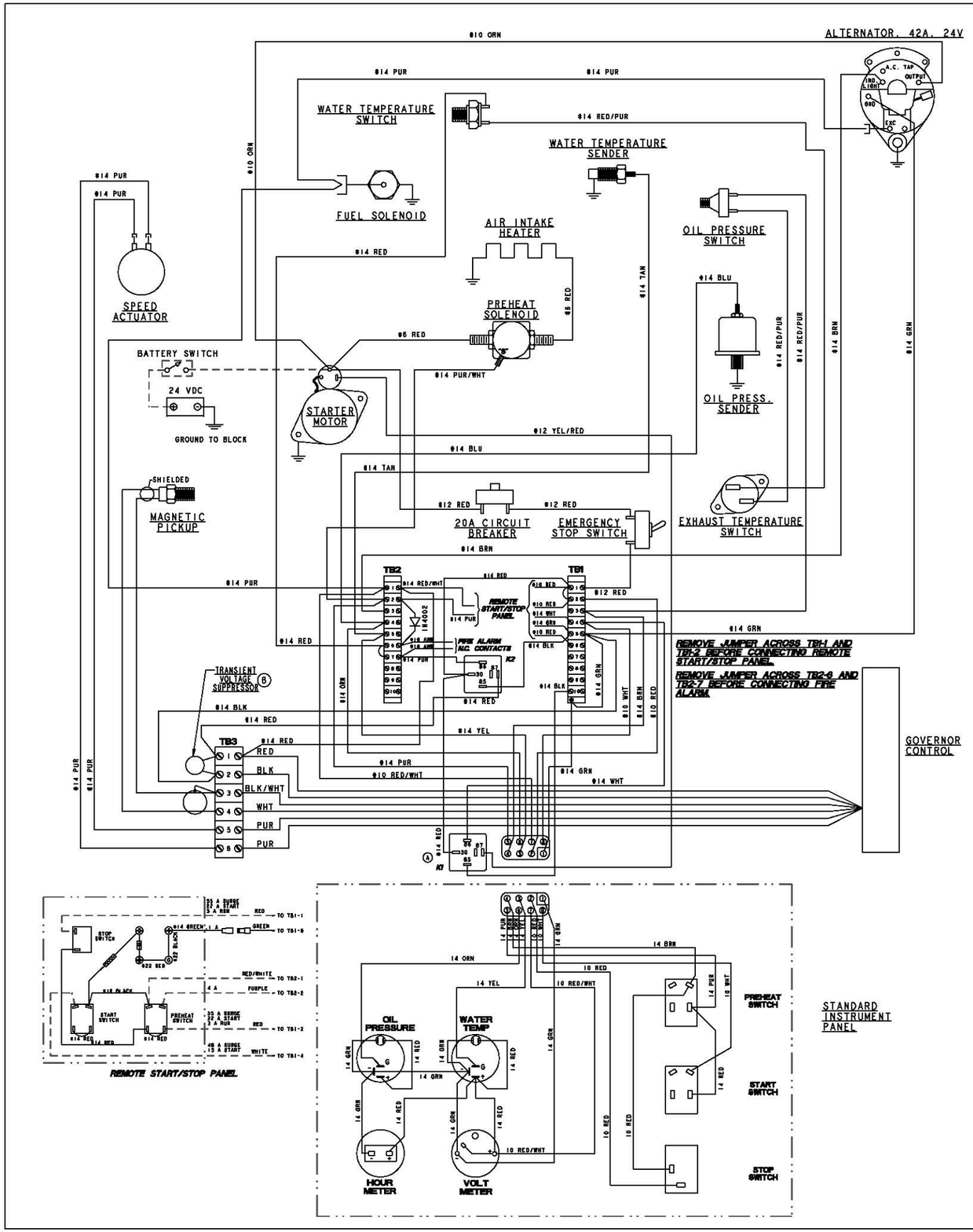

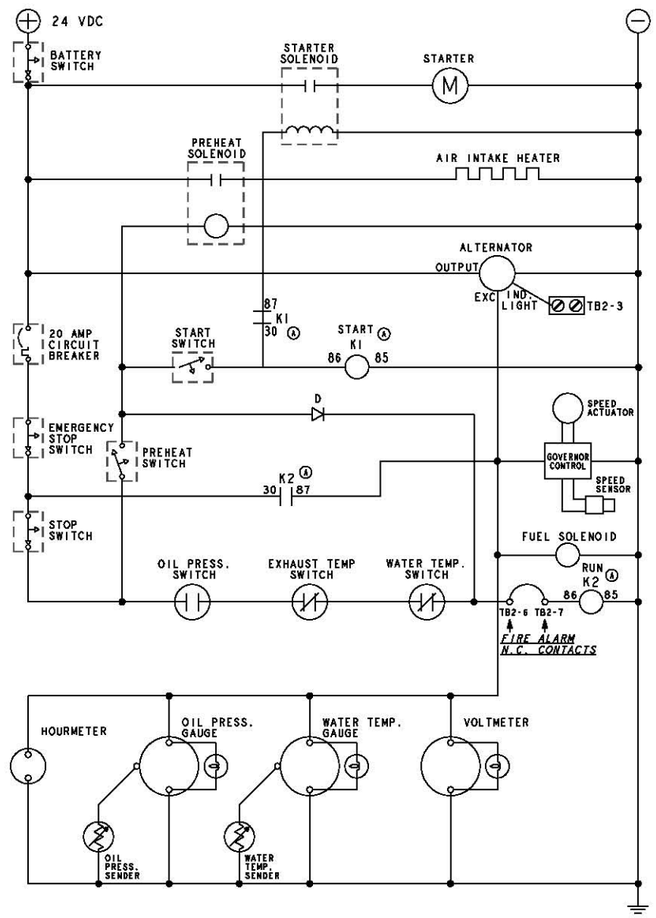

TOLERANCES	WESTERBEKE CORPORATION AVON MA. 02322		
INCHES / MILLIMETERS	TITLE: WIRING DIAGRAM, VIKING YACHT - 24V 32.0 KW.BEDA W/ELECTRONIC GOVERNING		
DIMENSIONS	DRAWN BY:	DATE: 10 MAR 04	SUBSCRIBE:
INCHES / MILLIMETERS	APPROVED BY:	DATE:	
	SCALE: NONE	SHEET: 1 OF 1	DRAWING NUMBER: E 41128 REV. B